Global Manufacturing Strut Accessories - Gold Saddle Washers

Features

Our Global Manufacturing Saddle Washers are designed to connect to metal framing channels by wrapping over the top surface. They are made with 12-Gauge metal for strength/reinforcement and are electro-galvanized for added durability. This particular washer is sized at 1/2" x 3/8" and designed not to allow turning.

Sizing and Features

Product	Size	Product Description	Box Qty.
GH120	1/2"+3/8"	Gold Saddle Washer	100

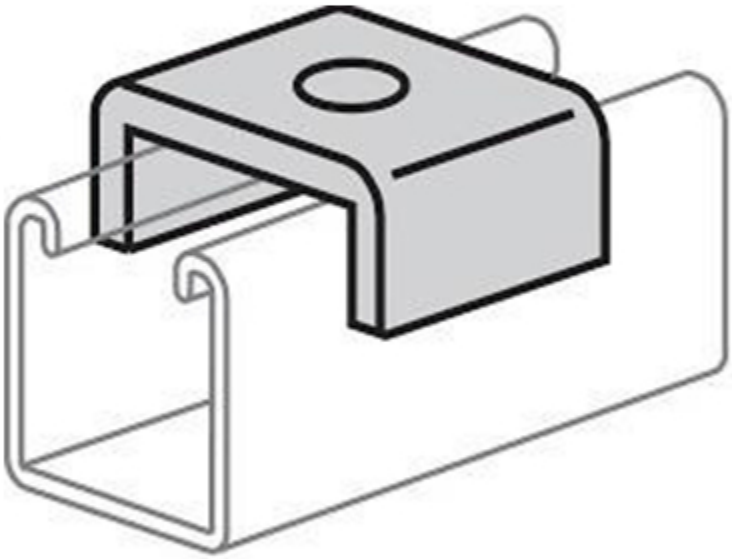

- Steel
- Gold-Plated
- Electro-Galvanized
- Extreme Durability
- High Impact Resistant
- Used to connect strut at an angle

Global Manufacturing
6315 Traffic Avenue, Ridgewood, NY 11385 | 718.257.2111